Technical and Test Institute for Construction Prague
Prosecká 811/76a
190 00 Prague
Czech Republic
eota@tzus.cz

Designated according to Article 29 of Regulation (EU) No 305/2011

Member of EOTA
www.eota.eu

European Technical Assessment

ETA 17/0183
of 20/03/2017

Technical Assessment Body issuing the ETA: Technical and Test Institute for Construction Prague	
Trade name of the construction product	Rawlplug R-XPT Throughbolts
Product family to which the construction product belongs	Product area code: 33 Torque controlled expansion anchor for use in uncracked concrete
Manufacturer	Rawlplug S.A. Ul. Kwidzyńska 6 51-416 Wrocław Poland
Manufacturing plant	Manufacturing Plant No 2
This European Technical Assessment contains	10 pages including 8 Annexes which form an integral part of this assessment
This European Technical Assessment is issued in accordance with regulation (EU) No 305/2011, on the basis of	EAD 330232-00-0601 Mechanical fasteners for use in concrete
This version is a corrigendum to	ETA 17/0183 of 20/03/2017

Translations of this European Technical Assessment in other languages shall fully correspond to the original issued document and should be identified as such.

1. Technical description of the product

The Rawlplug R-XPT Throughbolts are through-fixing torque-controlled expansion anchors in sizes of M8, M10, M12, M16 and M20. Each type comprises a nut, bolt, washer and expansion sleeve. The anchors are made from zinc-plated and passivated steel.

The anchor is installed in a drilled hole; tightening the nut draws the cone into the sleeve. The expansion of this sleeve applies the anchorage.

The installed anchor is shown in Annex 1.

2. Specification of the intended use in accordance with the applicable EAD

The performances given in Section 3 are only valid if the anchor is used in compliance with the specifications and conditions given in Annex B.

The provisions made in this European Technical Assessment are based on an assumed working life of the anchor of 50 years. The indications given on the working life cannot be interpreted as a guarantee given by the producer, but are to be regarded only as a means for choosing the products in relation to the expected economically reasonable working life of the works.

3. Performance of the product and references to the methods used for its assessment

3.1 Mechanical resistance and stability (BWR 1)

Essential characteristic	Performance
Characteristic resistance (static and quasi-static loading)	See Annex C 1 and C 2
Displacement	See Annex C 1 and C 2

3.2 Safety in case of fire (BWR 2)

Essential characteristic	Performance
Reaction to fire	Class A1 according to EN 13501-1
Resistance to fire	No performance assessed

4. Assessment and verification of constancy of performance (AVCP) system applied with reference to its legal base

According to the Decision 97/463/EC of the European Commission[1], the system 1 of assessment verification of constancy of performance (see Annex V to the Regulation (EU) No 305/2011) apply.

5. Technical details necessary for the implementation of the AVCP system, as provided in the applicable EAD

Technical details necessary for the implementation of the AVCP system are laid down in the control plan deposited at Technical and Test Institute for Construction Prague.

Issued in Prague on 20.03.2017

By

Ing. Mária Schaan
Head of the Technical Assessment Body

[1] Official Journal of the European Communities L 198/31 25.7.1997

Rawlplug R-XPT Throughbolts - Installed anchor

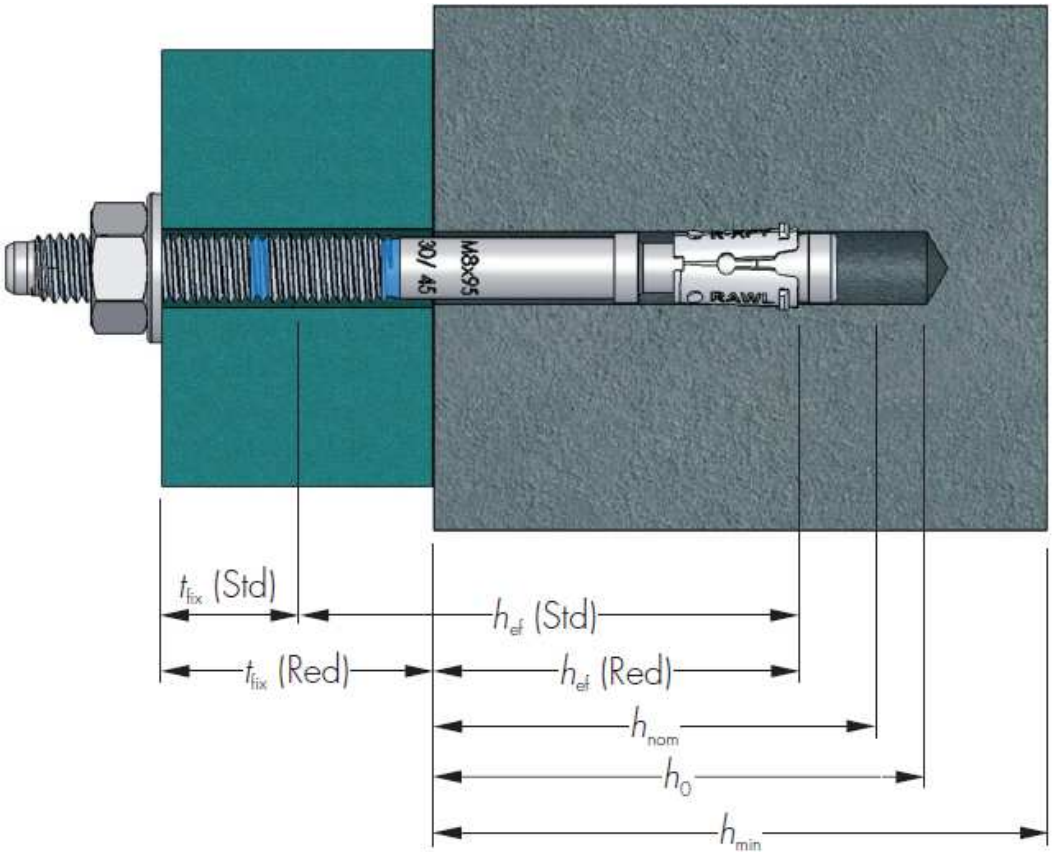

Rawlplug R-XPT Throughbolts - components

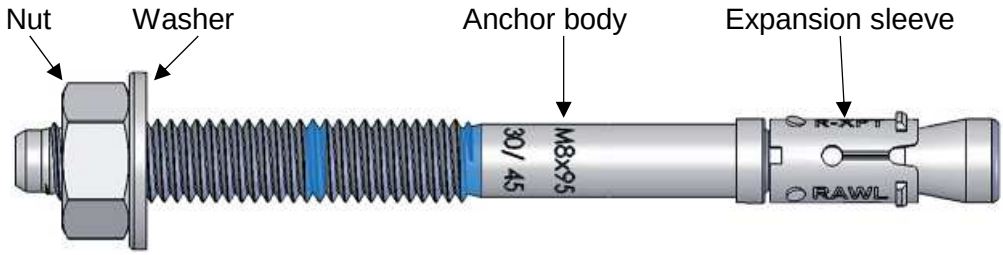

Rawlplug R-XPT Throughbolts	**Annex A 1**
Product description Installed conditions and components	

Table A1 - Materials

Component	Material	Coating
Anchor body	Steel grade C17C, EN 10263-2	Electroplated ≥ 5 µm and clear chromate film Cr3
Expansion sleeve	Steel grade DC03, EN 10139 M8-M12 C590 M16-M20 C490	
Hexagonal nut	according DIN 934	
Washer	according DIN 125A or DIN 9021	

Table A2 – Material properties

Component		M8 – M16	M20
Anchor body – ultimate tensile strength	[N/mm^2]	400 - 480	480 - 530
		M8 – M12	M16 – M20
Expansion sleeve – hardness	[HV]	185 - 215	155 - 185

Table A3 – Marking

M8														
Bolt length [mm]	60	65	75	80	85	90	95	100	105	115	120	140	150	160
Head marking	B	b	C	d	D	e	E	F	f	G	H	K	L	M
Bolt marking	-/10	-/15	10/25	15/30	20/35	25/40	30/45	35/50	40/55	50/65	55/70	75/90	85/100	95/110

M10											
Bolt length [mm]	65	80	85	90	95	115	120	130	140	150	180
Head marking	B	D	d	e	E	G	H	J	K	L	P
Bolt marking	-/5	10/20	15/25	20/30	25/35	45/55	50/60	60/70	70/80	80/90	110/120

M12																		
Bolt length [mm]	80	100	105	110	115	120	125	135	140	150	160	180	200	220	240	250	260	280
Head marking	D	F	f	G	g	h	H	J	K	L	M	P	R	S	T	U	V	X
Bolt marking	-/5	5/25	10/30	15/35	20/40	25/45	30/50	40/60	45/65	55/75	65/85	85/105	105/125	125/145	145/165	155/175	165/185	185/205

M16													
Bolt length [mm]	100	105	125	130	140	150	160	180	200	220	250	280	300
Head marking	F	f	H	J	K	L	M	P	R	S	U	X	Y
Bolt marking	-/5	-/10	5/25	10/30	20/40	30/50	40/60	60/80	80/100	100/120	130/150	160/180	180/200

M20								
Bolt length [mm]	125	140	160	165	180	200	250	300
Head marking	H	K	M	m	P	R	U	Y
Bolt marking	-/5	-/20	20/40	25/45	40/60	60/80	110/130	160/180

Rawlplug R-XPT Throughbolts

Product description
Materials
Marking

Annex A 2

Specifications of intended use

Anchorages subject to:

- Static and quasi-static load.

Base materials

- Uncracked concrete.
- Reinforced or unreinforced normal weight concrete of strength class C20/25 at minimum and C50/60 at maximum according EN 206-1:2000-12.

Use conditions (Environmental conditions)

- Structures subject to dry internal conditions.

Design:

- The anchorages are designed in accordance with the FprEN 1992-4:2016 and EOTA Technical Report TR 055, December 2016 under the responsibility of an engineer experienced in anchorages and concrete work.
- Verifiable calculation notes and drawings are prepared taking account of the loads to be anchored. The position of the anchor is indicated on the design drawings.

Installation:

- Anchor installation carried out by appropriately qualified personnel and under the supervision of the person responsible for technical matters of the site.
- Use of the anchor only as supplied by the manufacturer without exchanging any components of the anchor.
- Anchor installation in accordance with the manufacturer's specifications and drawings using the appropriate tools.
- Effective anchoring depth, edge distance and spacing not less than the specified values without minus tolerance.
- In case of aborted drill hole: new drilling at a minimum distance away of twice the depth of the aborted hole or smaller distance if the aborted drill hole is filled with high strength mortar and if under shear or oblique tension load it is not in the direction of load application.

Rawlplug R-XPT Throughbolts	**Annex B 1**
Intended use Specifications	

Table B1 - Installation parameters

Size	Drill hole diameter	Bolt length	Thread length	Hole diameter in fixture	Standard embedment			Reduced embedment			Installation torque
					Min. hole depth	Effective embedment depth	Max. fixture thickness	Min. hole depth	Effective embedment depth	Max. fixture thickness	
	d_0 [mm]	l [mm]	l_G [mm]	d_f [mm]	h_0 [mm]	h_{ef} [mm]	t_{fix} [mm]	h_0 [mm]	h_{ef} [mm]	t_{fix} [mm]	T_{inst} [N.m]
M8	8	60	25	9	-	-	-	40	32	10	15
		65	30	9	-	-	-	40	32	15	
		75	35	9	55	47	10	40	32	25	
		80	40	9	55	47	15	40	32	30	
		85	45	9	55	47	20	40	32	35	
		90	50	9	55	47	25	40	32	40	
		95	55	9	55	47	30	40	32	45	
		100	60	9	55	47	35	40	32	50	
		105	65	9	55	47	40	40	32	55	
		115	75	9	55	47	50	40	32	65	
		120	80	9	55	47	55	40	32	70	
		140	100	9	55	47	75	40	32	90	
		150	100	9	55	47	85	40	32	100	
		160	100	9	55	47	95	40	32	110	
M10	10	65	21	11	-	-	-	49	39	5	30
		80	31	11	59	49	10	49	39	20	
		85	36	11	59	49	15	49	39	25	
		90	41	11	59	49	20	49	39	30	
		95	46	11	59	49	25	49	39	35	
		115	66	11	59	49	45	49	39	55	
		120	71	11	59	49	50	49	39	60	
		130	81	11	59	49	60	49	39	70	
		140	91	11	59	49	70	49	39	80	
		150	101	11	59	49	80	49	39	90	
		180	100	11	59	49	110	49	39	120	
M12	12	80	30	13	-	-	-	60	48	5	50
		100	40	13	80	68	5	60	48	25	
		105	45	13	80	68	10	60	48	30	
		110	50	13	80	68	15	60	48	35	
		115	55	13	80	68	20	60	48	40	
		120	60	13	80	68	25	60	48	45	
		125	65	13	80	68	30	60	48	50	
		135	75	13	80	68	40	60	48	60	
		140	80	13	80	68	45	60	48	65	
		150	90	13	80	68	55	60	48	75	
		160	100	13	80	68	65	60	48	85	
		180	100	13	80	68	85	60	48	105	
		200	100	13	80	68	105	60	48	125	
		220	100	13	80	68	125	60	48	145	
		240	100	13	80	68	145	60	48	165	
		250	100	13	80	68	155	60	48	175	
		260	100	13	80	68	165	60	48	185	
		280	100	13	80	68	185	60	48	205	
M16	16	100	30	18	-	-	-	80	65	5	100
		105	35	18	-	-	-	80	65	10	
		125	45	18	100	85	5	80	65	25	
		130	50	18	100	85	10	80	65	30	
		140	60	18	100	85	20	80	65	40	
		150	70	18	100	85	30	80	65	50	
		160	80	18	100	85	40	80	65	60	
		180	100	18	100	85	60	80	65	80	
		200	100	18	100	85	80	80	65	100	
		220	100	18	100	85	100	80	65	120	
		250	100	18	100	85	130	80	65	150	
		280	100	18	100	85	160	80	65	180	
		300	100	18	100	85	180	80	65	200	
M20	20	125	50	22	-	-	-	100	80	5	200
		140	50	22	-	-	-	100	80	20	
		160	61	22	119	99	20	100	80	40	
		165	66	22	119	99	25	100	80	45	
		180	81	22	119	99	40	100	80	60	
		200	100	22	119	99	60	100	80	80	
		250	100	22	119	99	110	100	80	130	
		300	100	22	119	99	160	100	80	180	

Rawlplug R-XPT Throughbolts

Intended use
Installation parameters

Annex B 2

Table B2 - Installation parameters – Minimum spacing and edge distance

Size			M8		M10		M12		M16		M20	
			Red[1)]	Std	Red[1)]	Std	Red	Std	Red	Std	Red	Std
Minimum thickness of concrete member	h_{min}	[mm]	100	100	100	100	100	136	130	170	158	198
Minimum spacing	s_{min}	[mm]	45	50	55	55	100	75	100	90	125	140
for edge distance	c ≥	[mm]	50	55	65	65	100	90	100	105	125	160
Minimum edge distance	c_{min}	[mm]	40	40	65	50	100	65	100	80	125	100
for spacing	s ≥	[mm]	100	100	55	90	100	100	100	150	125	200

[1)] Use restricted to anchoring statically indeterminate structural components

Pre-torque installation

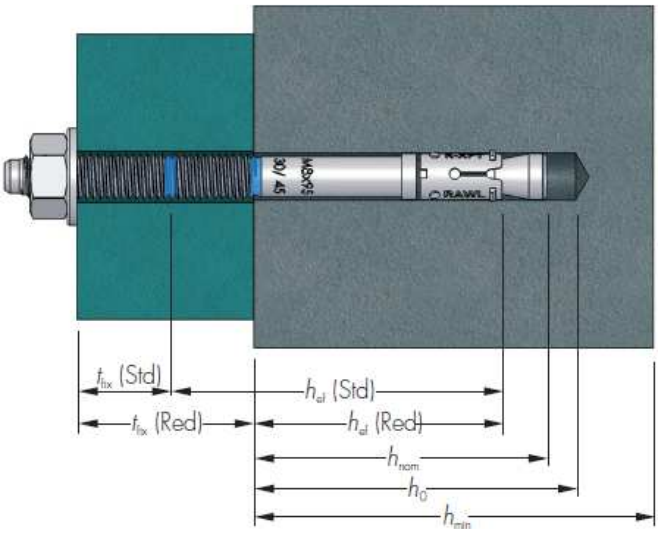

Post-torque installation

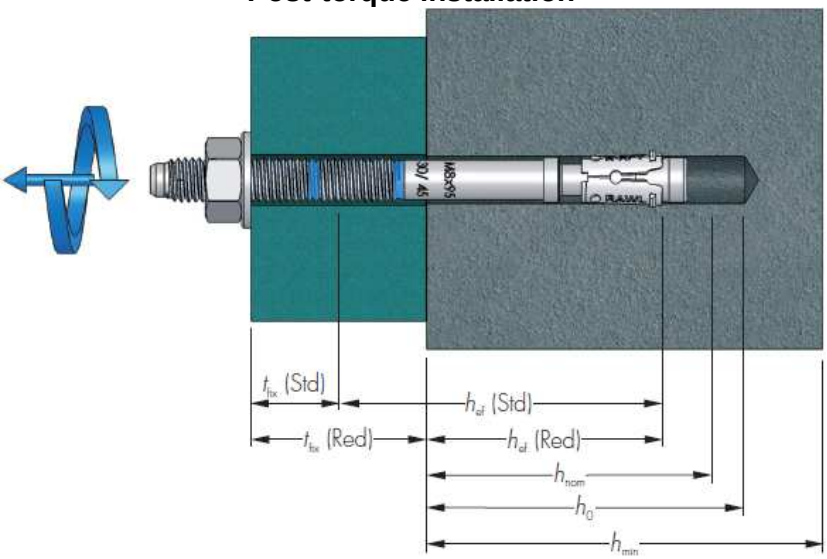

Rawlplug R-XPT Throughbolts	**Annex B 3**
Intended use Installation parameters	

Installation instructions

1. 

Drill a hole of required diameter and depth

2. 

Clear the hole of drilling dust and debris
(using blowpump or equivalent method)

3. 

Lightly tap the throughbolt through the fixture into hole
with a hammer, until fixing depth is reached

4. 

Tighten to the recommended torque

5. 

Assembled condition of anchor

Rawlplug R-XPT Throughbolts	**Annex B 4**
Intended use Installation instructions	

Table C1 – Characteristic resistance under tension load

Steel failure												
Size			M8		M10		M12		M16		M20	
			Red[1)]	Std	Red[1)]	Std	Red	Std	Red	Std	Red	Std
Characteristic resistance	$N_{Rk,s}$	[kN]	15,8		25,2		37,3		66,1		101,0	
Partial safety factor	γ_{Ms}	[-]	1,4		1,4		1,4		1,4		1,4	

Pull-out failure												
Characteristic resistance in uncracked concrete C20/25	$N_{Rk,p}$	[kN]	9,0	12,0	9,0	12,0	16,0	25,0	30,0	40,0	35,0	40,0
Installation safety factor	γ_{inst}	[-]	1,2	1,2	1,2	1,2	1,2	1,2	1,2	1,2	1,2	1,2
Increasing factor												
Uncracked concrete C30/37	ψ_c	[-]	1,25	1,10	1,36	1,37	1,20	1,16	1,12	1,17	1,18	1,30
Uncracked concrete C40/50	ψ_c	[-]	1,50	1,21	1,72	1,74	1,40	1,33	1,23	1,34	1,36	1,59
Uncracked concrete C50/60	ψ_c	[-]	1,76	1,32	2,08	2,10	1,60	1,49	1,34	1,50	1,54	1,89

Concrete cone failure												
Factor for concrete cone failure for uncracked concrete	$k_{ucr,N}$	[-]	11,0									
Installation safety factor	γ_{inst}	[-]	1,2	1,2	1,2	1,2	1,2	1,2	1,2	1,2	1,2	1,2
Effective anchorage depth	h_{ef}	[mm]	32	47	39	49	48	68	65	85	79	99
Spacing	$s_{cr,N}$	[mm]	96	141	117	147	144	204	195	255	237	297
Edge distance	$c_{cr,N}$	[mm]	48	71	59	74	72	102	98	128	119	149

Splitting failure												
Spacing	$s_{cr,sp}$	[mm]	160	240	200	260	250	370	360	430	410	530
Edge distance	$c_{cr,sp}$	[mm]	80	120	100	130	125	185	180	215	205	265
Installation safety factor	γ_{inst}	[-]	1,2	1,2	1,2	1,2	1,2	1,2	1,2	1,2	1,2	1,2

[1)] Use restricted to anchoring statically indeterminate structural components

Table C2 – Displacement under tension load

Size			M8		M10		M12		M16		M20	
			Red[1)]	Std	Red[1)]	Std	Red	Std	Red	Std	Red	Std
Tension load in uncracked concrete	N	[kN]	3,6	4,8	3,6	4,8	6,3	9,9	11,9	15,9	13,9	15,9
Displacement	δ_{N0}	[mm]	0,20	0,20	0,20	0,20	0,20	0,20	0,20	0,20	0,20	0,20
	$\delta_{N\infty}$	[mm]	0,35	0,35	0,35	0,35	0,35	0,35	0,35	0,35	0,35	0,35

[1)] Use restricted to anchoring statically indeterminate structural components

Rawlplug R-XPT Throughbolts

Performances
Characteristic resistance under tension load
Displacement under tension load

Annex C 1

Table C3 – Characteristic resistance under shear load

Steel failure without lever arm												
Size			M8		M10		M12		M16		M20	
			Red[1)]	Std	Red[1)]	Std	Red	Std	Red	Std	Red	Std
Characteristic resistance	$V^0_{Rk,s}$	[kN]	10,1		16,0		23,3		43,0		67,4	
Ductility factor	k_7	[-]	0,8		0,8		0,8		0,8		0,8	
Partial safety factor	γ_{Ms}	[-]	1,25		1,25		1,25		1,25		1,25	

Steel failure with lever arm							
Characteristic resistance	$M^0_{Rk,s}$	[Nm]	17	35	61	154	301
Partial safety factor	γ_{Ms}	[-]	1,25	1,25	1,25	1,25	1,25

Concrete pry-out failure												
Factor	k_8	[-]	1,0	1,0	1,0	1,0	1,0	2,0	2,0	2,0	2,0	2,0
Installation safety factor	γ_{inst}	[-]	1,0	1,0	1,0	1,0	1,0	1,0	1,0	1,0	1,0	1,0

Concrete edge failure												
Effective length of anchor	ℓ_f	[mm]	32	47	39	49	48	68	65	85	79	99
Anchor diameter	d_{nom}	[mm]	8		10		12		16		20	
Installation safety factor	γ_{inst}	[-]	1,0	1,0	1,0	1,0	1,0	1,0	1,0	1,0	1,0	1,0

[1)] Use restricted to anchoring statically indeterminate structural components

Table C4 – Displacement under shear load

Size			M8		M10		M12		M16		M20	
			Red[1)]	Std	Red[1)]	Std	Red	Std	Red	Std	Red	Std
Tension load in uncracked concrete	V	[kN]	4,0	4,0	4,8	6,3	9,2	9,2	17,1	17,1	27,4	27,4
Displacement	δ_{V0}	[mm]	1,8	1,8	1,8	1,8	2,4	2,4	3,0	3,0	3,0	3,0
	$\delta_{V\infty}$	[mm]	2,7	2,7	2,7	2,7	3,6	3,6	4,5	4,5	4,5	4,5

[1)] Use restricted to anchoring statically indeterminate structural components

Rawlplug R-XPT Throughbolts

Performances
Characteristic resistance under shear load
Displacement under shear load

Annex C 2